Appendix

D The Bracket Problem

This drawing is present to challenge anyone with the time and the energy to duplicate the standards of the bracket problem. The drawing requires the same skill set as learned in Unit 3, so you should be able to achieve a similar CAD drawing time and accuracy score.

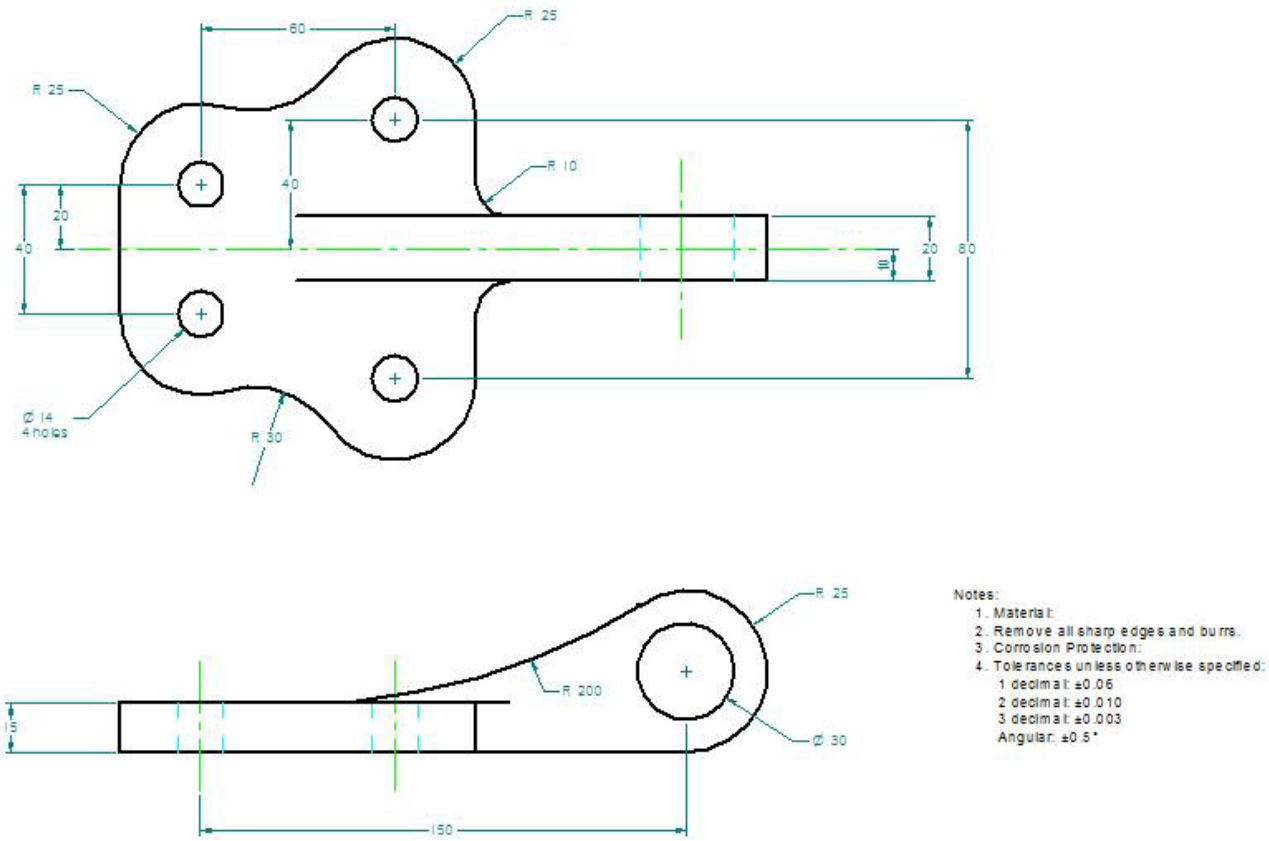

Figure D.1 – The Circular Problem

*** World Class CAD Challenge* - Create a New file and draw the entire bracket drawing on proper layers, using proper dimensions and finally placing the notes on the drawing. Continue this drill four times, each time completing the drawing under 15 minutes to maintain your World Class ranking.**

Send your best time and a copy of your drawing for verification to the authors of these problems to have your name, location and time posted. See the web site for instructions on www.worldclasscad.com